Modular Freestanding Enclosures - NEMA 12

IPC Series PC Enclosure

Window Door

Solid Door

Application

- The IPC product line provides users with a rugged housing for industrial control, operator interface and computer equipment in harsh industrial environments.
- Modular design permits joining of units for large scale and mixed use applications.
- Increasingly, PC technology is utilized on the factory floor. The PC enclosure provides a secure housing for standard PC components.
- A broad range of industry standard sizes are offered. Units are constructed to imperial dimensions and hardware sizes, with metric sizing provided for convenient reference.

Standards

- UL 508 Type 12
- CSA Type 12
- **Complies with**
  - NEMA Type 12
  - IEC 529 IP65

Standard Configuration

- Frame with integral solid top
- Provision for lifting eyebolts (included)
- 4 internal mounting rails
- Removable bottom panel
- Top window or solid door with key locking handle
- Monitor shelf (window door version)
- Drop down keyboard door with locking hardware
- Self contained keyboard compartment
- Pull-out keyboard shelf with left/right mouse tray
- Solid bottom door with key locking handle
- Solid full-height rear door with key locking handle
- Pair of solid side panels

Construction

- Formed 14 gauge steel.
- Frame features welded corner reinforcements.
- Oil resistant gaskets are permanently secured on all openings.
- Frames are easily joined together with an optional joining kit.
- Doors can be easily removed.
- Formed 16 gauge steel side panels are recessed to fit flush with the sides of the cabinet.
- Bonding and grounding studs are provided for all doors and handles.

Finish

- Phosphatized and finished in RAL 7032 beige (CG1) powder coating.
- Monitor shelf is finished in RAL 7032 beige powder coating.
- Keyboard door is finished in black powder coating.

Accessories

- Base inner panel...*see page* ***236***
- Caster assembly-inside mounting...*see page* ***240***
- Caster assembly-outside mounting...*see page* ***240***
- Door shelf...*see page* ***237***
- Fixed vented shelf...*see page* ***236***
- Fold down shelf...*see page* ***237***
- Joining kit...*see page* ***234***
- Leveling feet...*see page* ***238***
- Light kit and accessories...*see page* ***239***
- Literature pocket...*see page* ***238***
- Plinth...*see page* ***237***
- Power bars...*see page* ***388-390***
- Printer shelf...*see page* ***236***
- Server shelf...*see page* ***236***
- Tamper resistant screws...*see page* ***239***
- Vented raised top...*see page* ***234***
- Top mount fan...*see page* ***363***

Modular Freestanding Enclosures - NEMA 12

IPC Series PC Enclosure

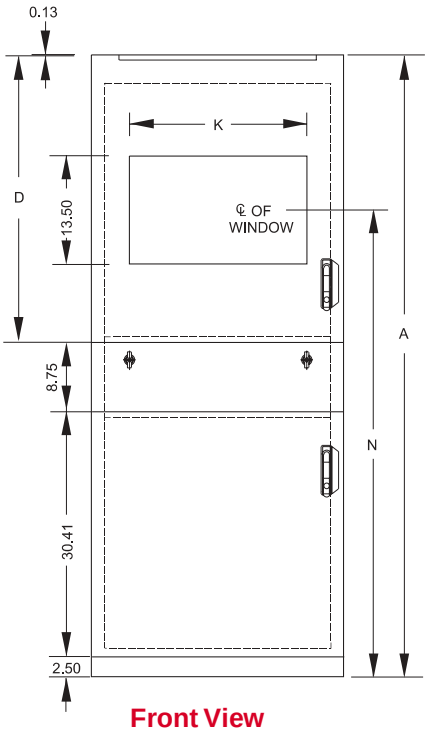

Front View

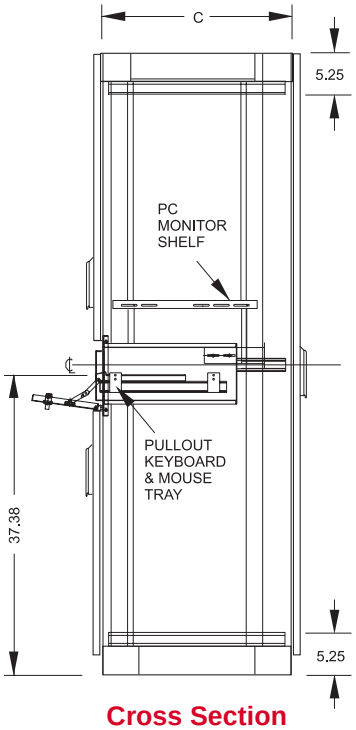

Cross Section Side View

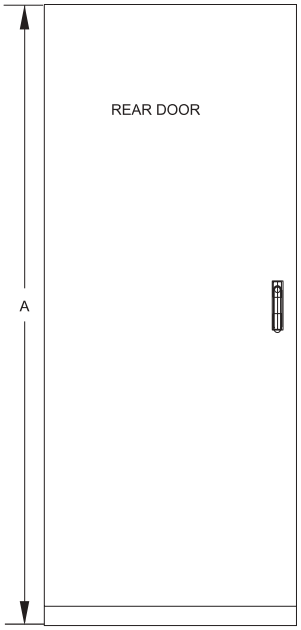

Rear View

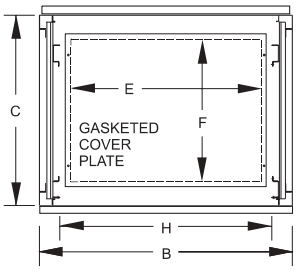

Cross Section - Bottom View

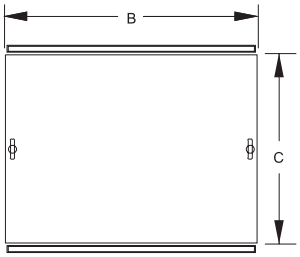

Top View
Doors Installed

Keyboard Dimensions

Enclosure Width (mm)		Maximum Keyboard Width
700	inch	20.0
	mm	*508*
800	inch	24.0
	mm	*610*

Window Door Part No.	Solid Door Part No.	Nominal Dimensions A x B x C (mm)		Overall Dimensions A	B	C	D	E	F	H	K	N	Ship Wt. lbs
IPC1676	**IPC1676ST**	1600 x 700 x 600	inch	70.31	28.00	23.63	26.66	17	10.5	22.8	18	54	340
			mm	*1786*	*711*	*600*	*677*	*432*	*267*	*579*	*457*	*1372*	
IPC1678	**IPC1678ST**	1600 x 700 x 800	inch	70.31	28.00	31.50	26.66	17	17.5	22.8	18	54	355
			mm	*1786*	*711*	*800*	*677*	*432*	*445*	*579*	*457*	*1372*	
IPC1686	**IPC1686ST**	1600 x 800 x 600	inch	70.31	31.50	23.63	26.66	24	10.5	26.3	22	54	350
			mm	*1786*	*800*	*600*	*677*	*610*	*445*	*668*	*559*	*1372*	
IPC1876	**IPC1876ST**	1800 x 700 x 600	inch	77.31	28.00	23.63	33.66	17	10.5	22.8	18	58	355
			mm	*1964*	*711*	*600*	*855*	*432*	*267*	*579*	*457*	*1473*	
IPC1878	**IPC1878ST**	1800 x 700 x 800	inch	77.31	28.00	31.50	33.66	17	17.5	22.8	18	58	380
			mm	*1964*	*711*	*800*	*855*	*432*	*445*	*579*	*457*	*1473*	
IPC1886	**IPC1886ST**	1800 x 800 x 600	inch	77.31	31.50	23.63	33.66	24	10.5	26.3	22	58	370
			mm	*1964*	*800*	*600*	*855*	*610*	*267*	*668*	*559*	*1473*	